## *2; Ankertypen volgens LR*

# Types of Anchors

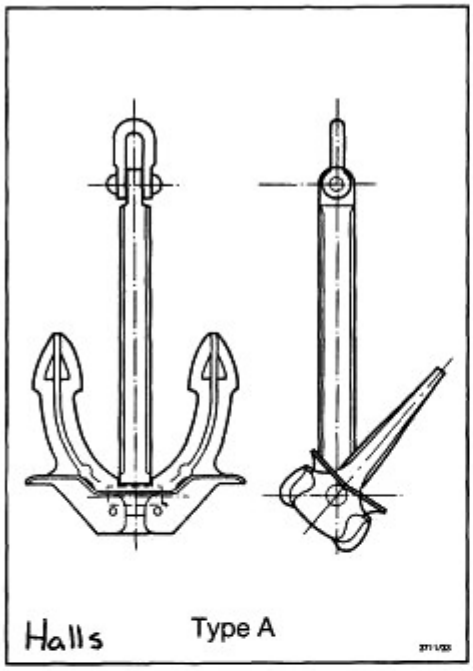


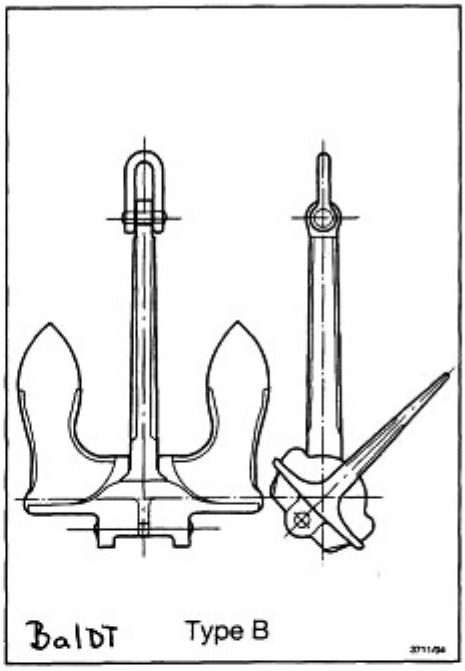


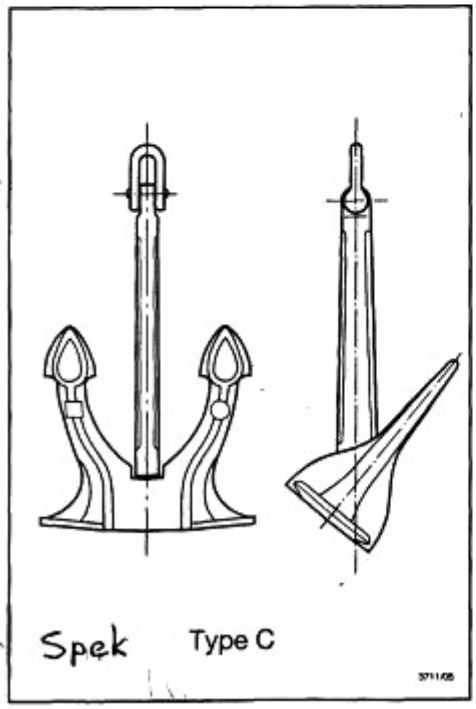


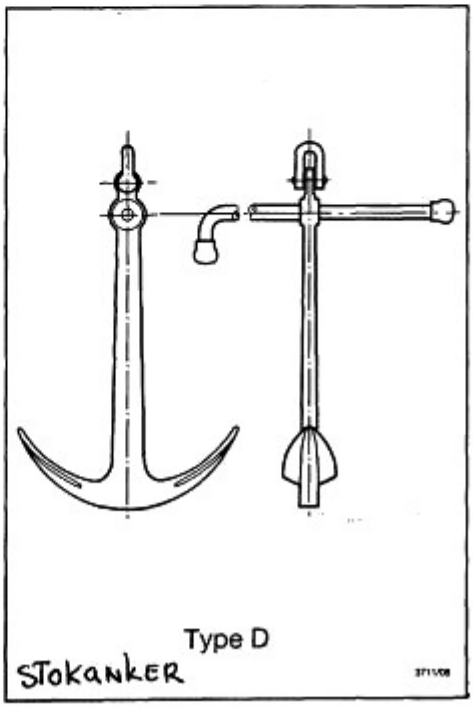

# Types of Anchors

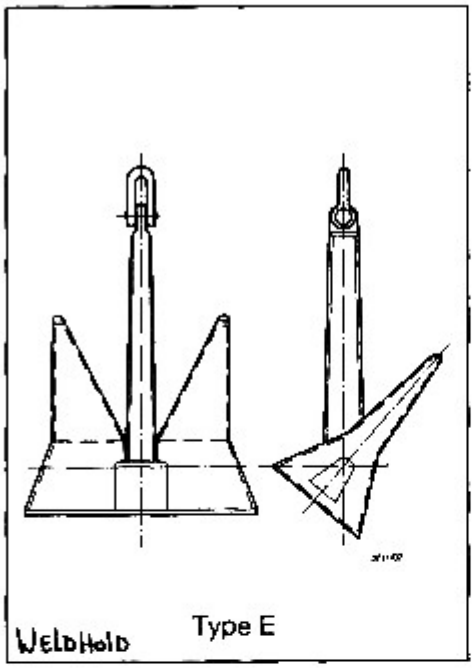


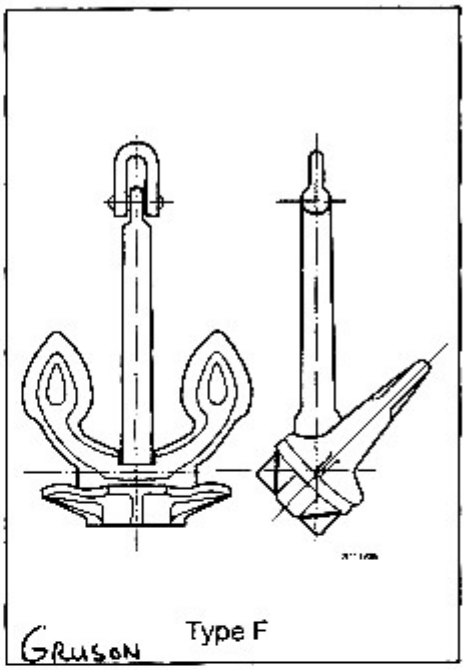


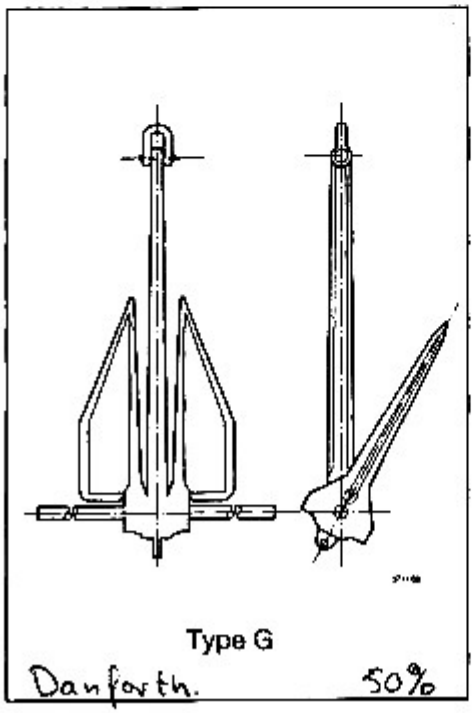


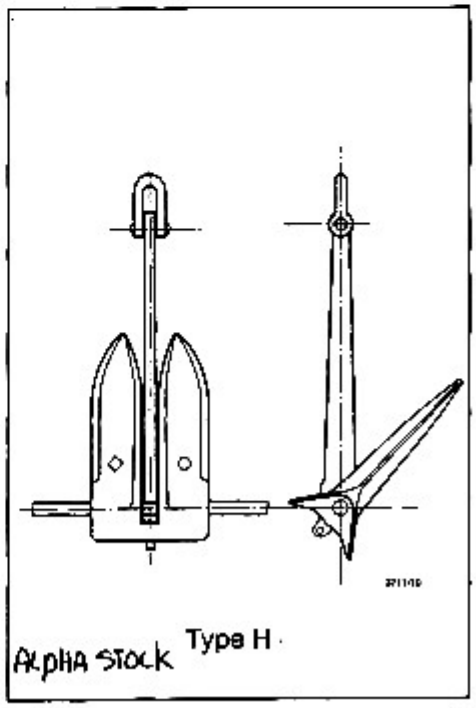

# Types of Anchors

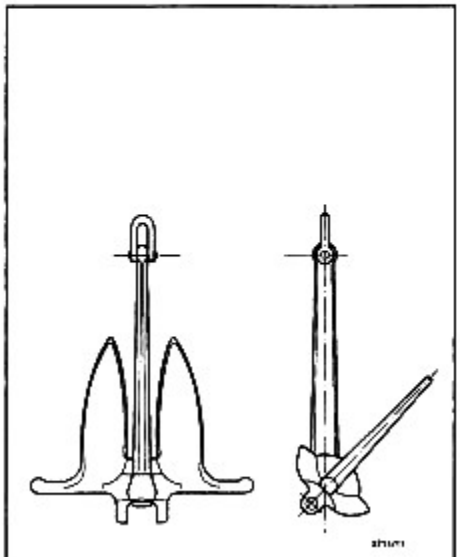

Snug Stowing Type I

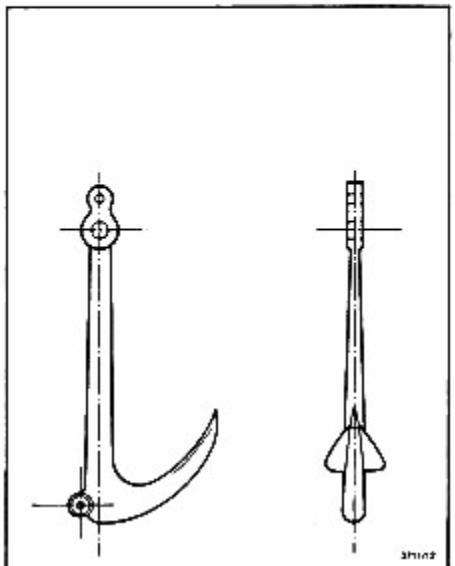

Single Fluke Type J

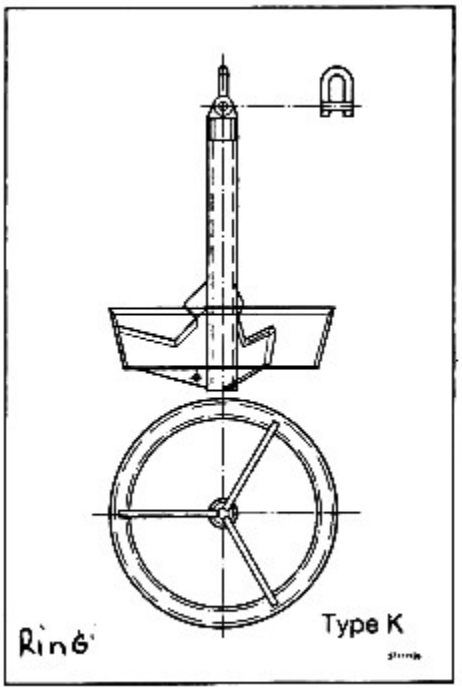

Ring Type K

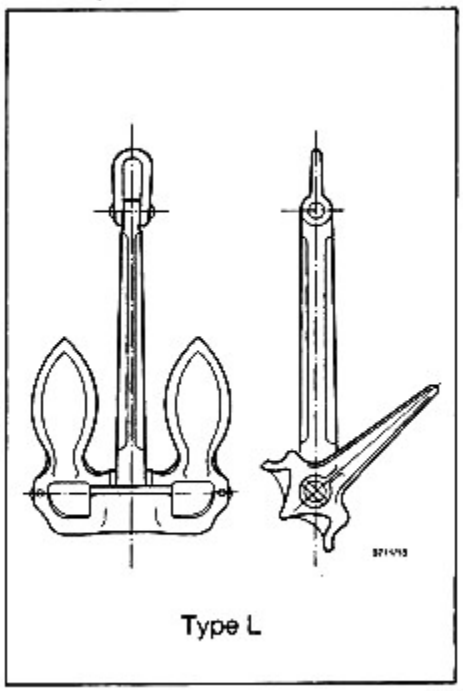

Type L

# Types of Anchors

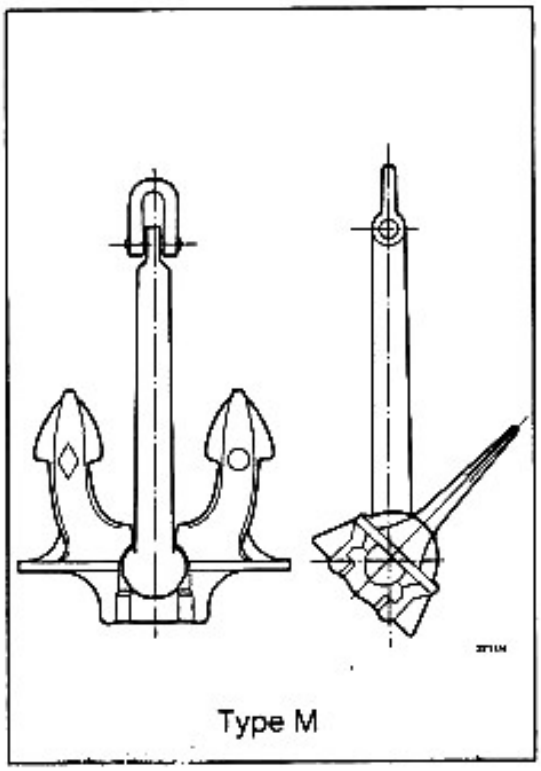

# Types of Anchors

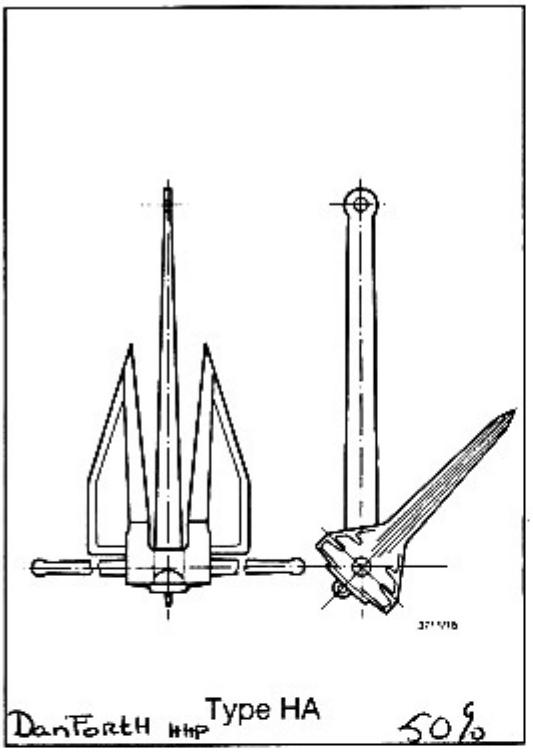


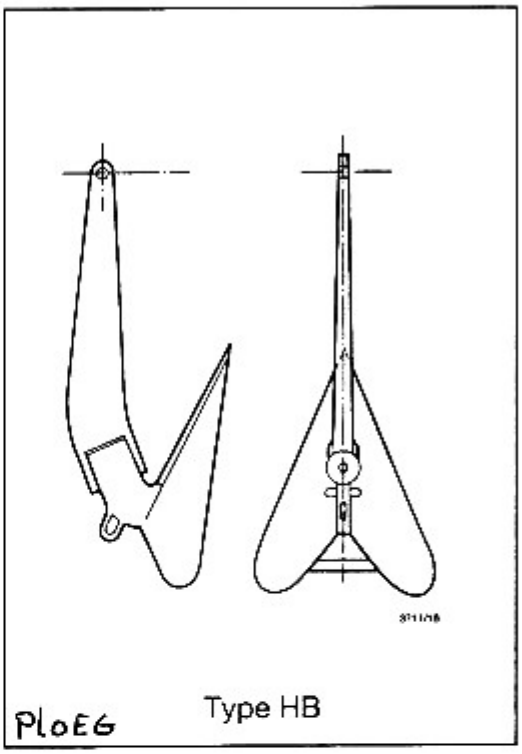


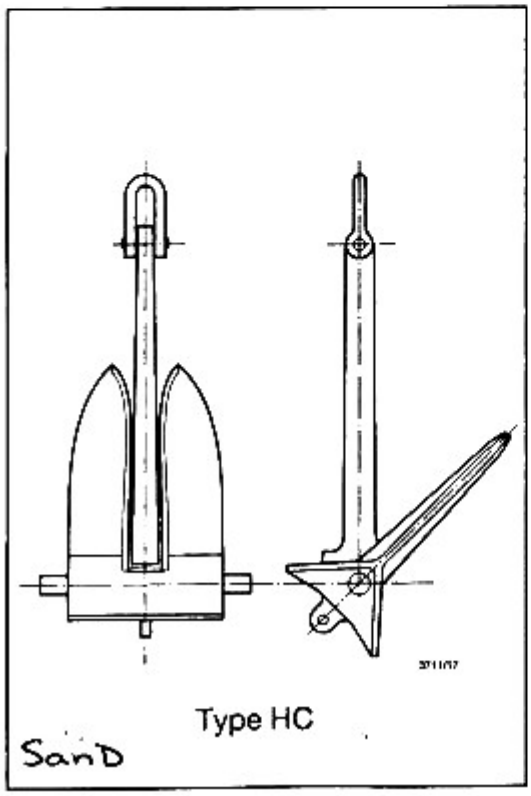


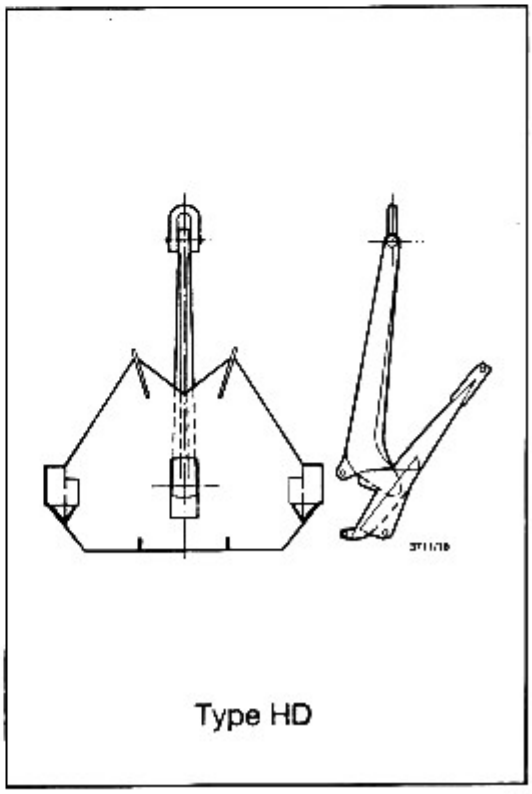

# Types of Anchors

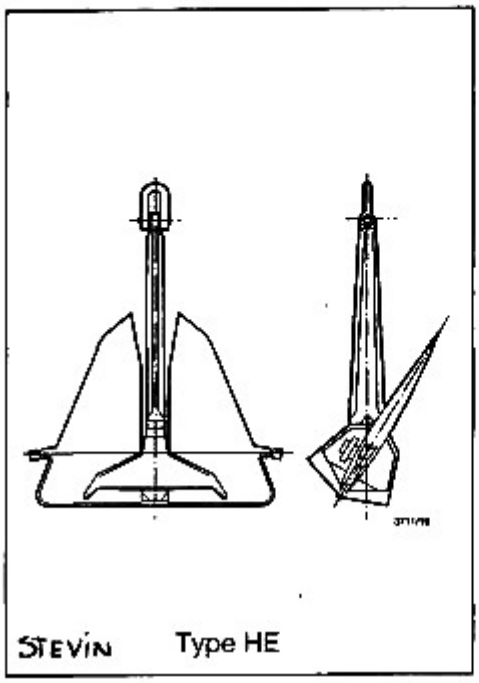


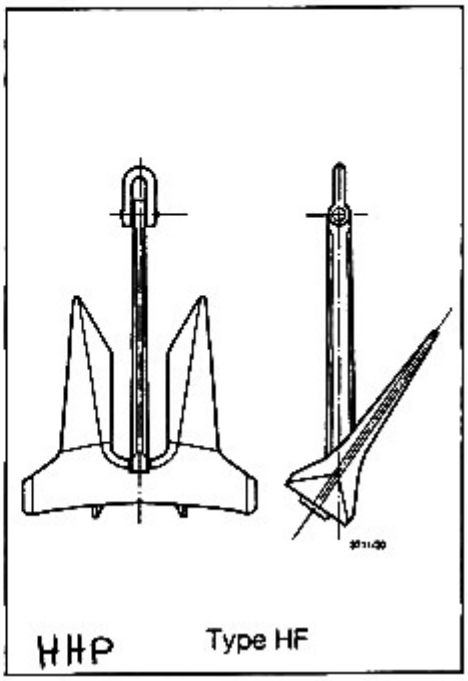


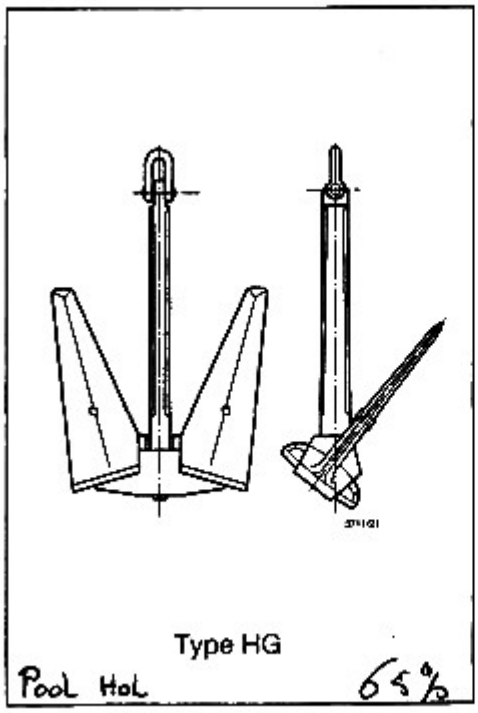


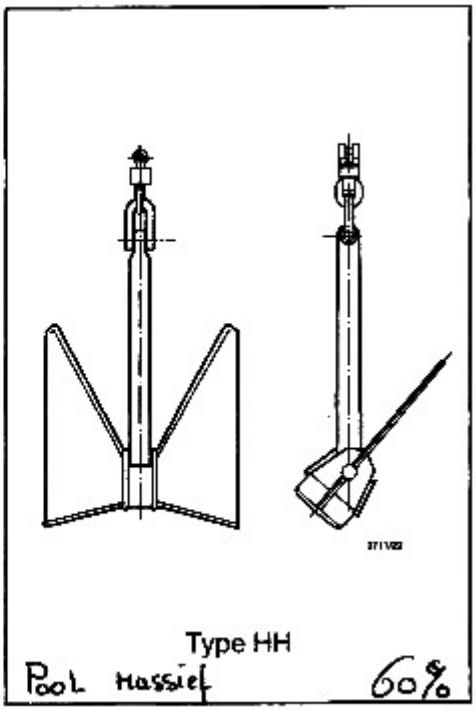

# Types of Anchors

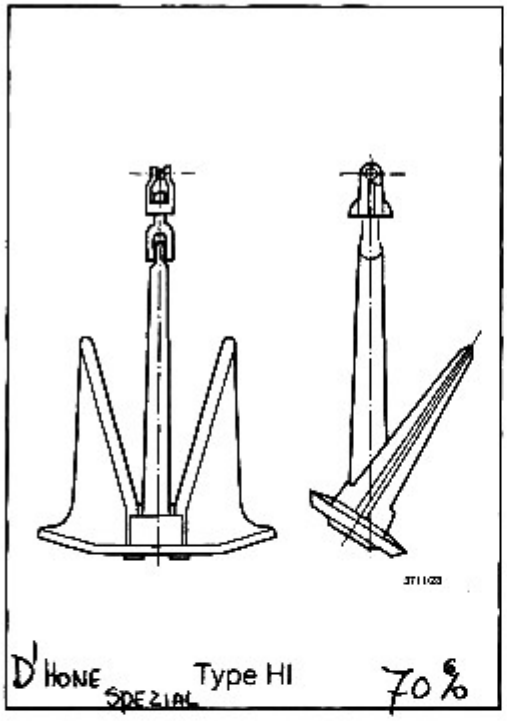


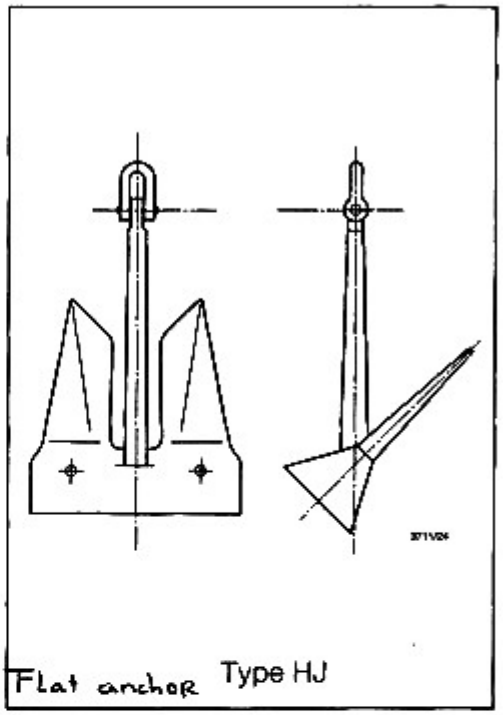


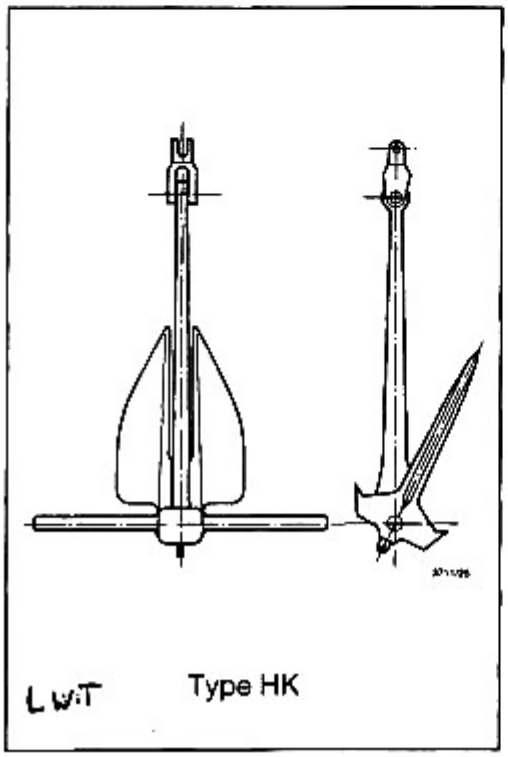


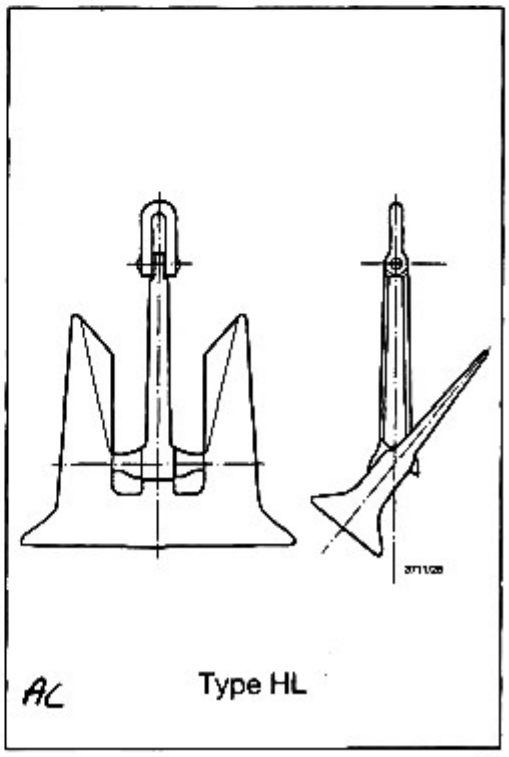

# Types of Anchors

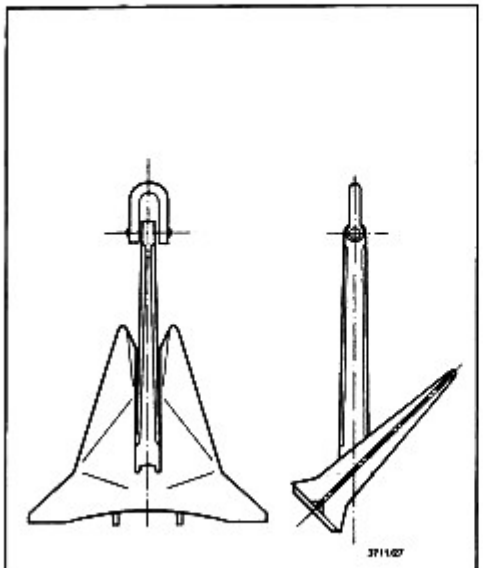

FLIPPER DELTA
Type HM

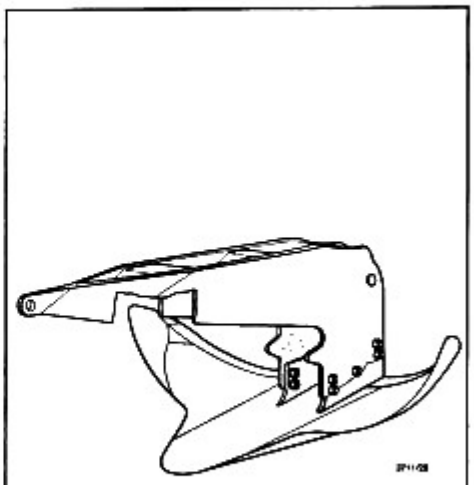

Ploegschaar Type HN

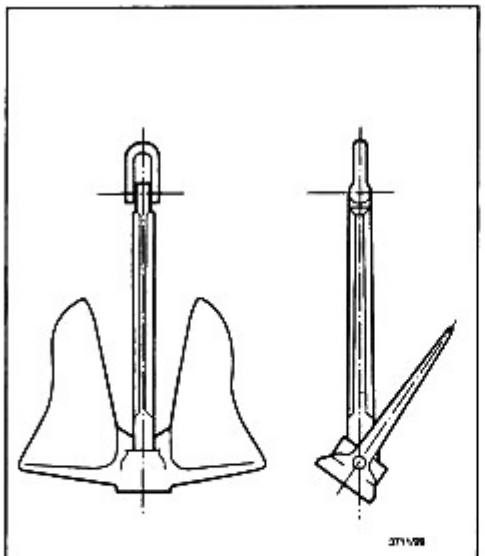

Type HO

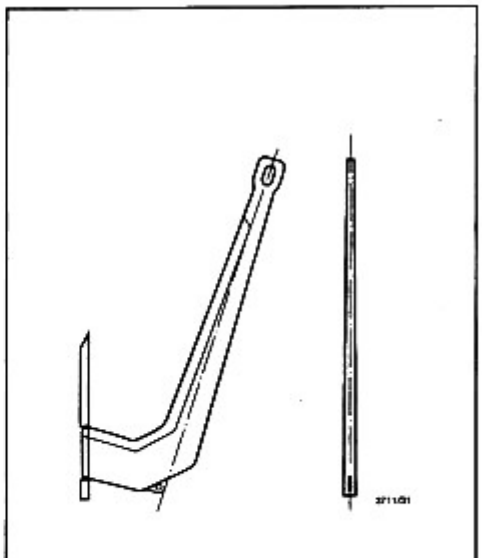

Type HP

# Types of Anchors

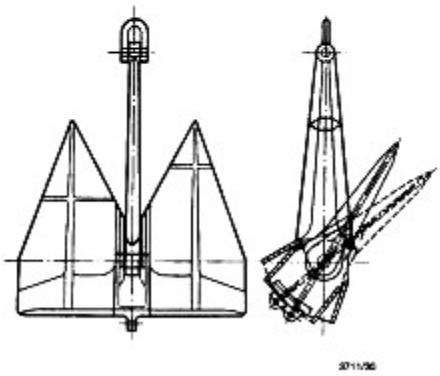

Type HQ

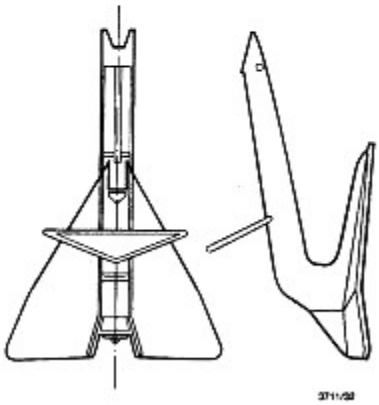

Type HR